Modular ADC Evaluation PCB

Confidential Customer Project

Designed by: [Zuheer Al hariri]
Electrical & Electronics Engineer | PCB Design (Altium Designer, Cadence)

---

1. Project Overview

This project involved the design of a **modular PCB evaluation platform** developed to support testing and characterization of a **customer-designed Analog-to-Digital Converter (ADC)**.

The board was intended to provide a **controlled, low-noise, and flexible environment** for validating ADC behavior during development and integration phases.

All circuit details, specifications, and performance metrics are protected under customer ownership and confidentiality agreements. This document focuses on **design methodology and engineering approach**, not proprietary implementation.

---

2. Design Objectives

The PCB was designed to meet the following objectives:

- Enable reliable interfacing with a proprietary ADC device
- Support modular testing and subsystem isolation
- Preserve signal integrity in a mixed-signal environment
- Provide accessible test points for laboratory validation
- Allow future revisions without full redesign

---

3. System Architecture

The board follows a **modular architecture**, separating functional domains to reduce interference and simplify testing.

Typical functional partitions include:

- ADC interface and support circuitry
- Power regulation and filtering domain
- Reference and bias support
- Digital interface and control access
- External connectors for test equipment

This separation improves measurement reliability and enables independent subsystem evaluation.

---

4. Schematic Design Approach

The schematic design emphasizes clarity, maintainability, and testability:

- Explicit separation of analog, digital, and power domains
- Decoupling and filtering strategies appropriate for ADC evaluation
- Clearly defined net naming and hierarchical structure
- Dedicated test points to support probing and characterization

Component selection prioritized **electrical performance and stability** over cost, consistent with an evaluation-focused design.

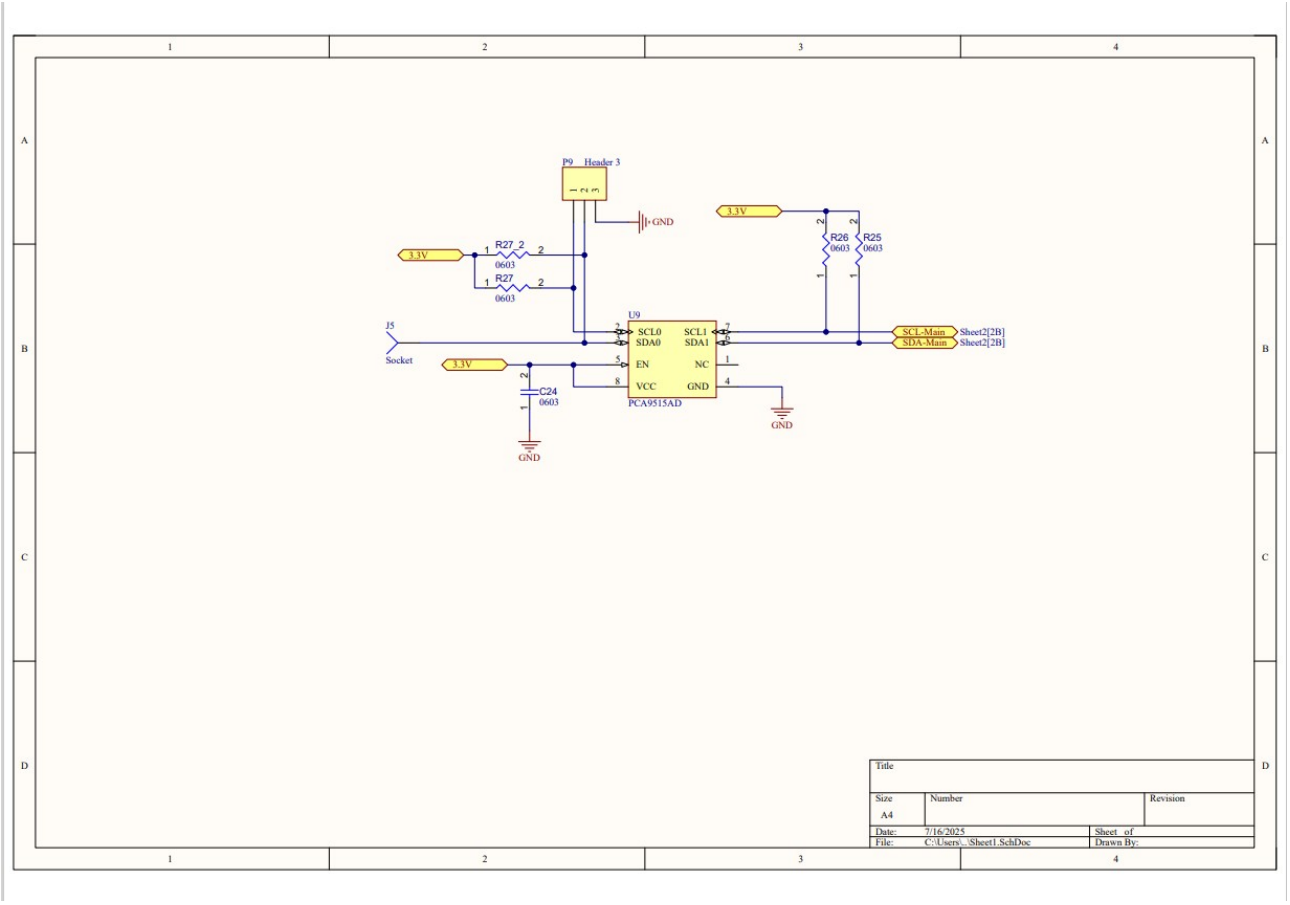

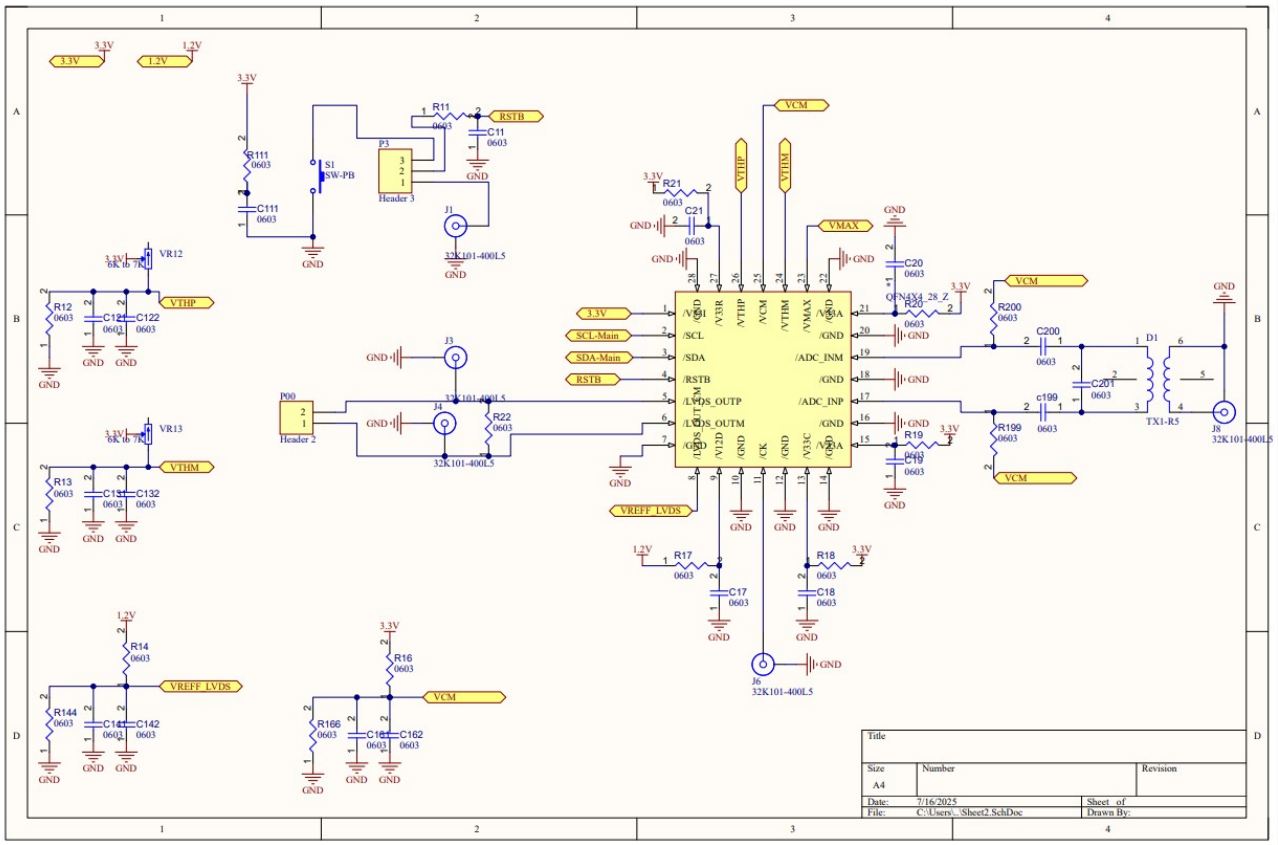
3.3V
1.2V
R11
0603
RSTB
C11
0603
P3
Header 3
S1
SW-PB
R111
0603
C111
0603
J1
32K101-400L5
VR12
6K ib 7R
VTHP
R12
0603
C121
C122
0603
VR13
6K ib 7R
VTHM
R13
0603
C131
C132
0603
P00
Header 2
J3
J4
32K101-400L5
R22
0603
R14
0603
VREFF_LVDS
R144
0603
C141
C142
0603
R16
0603
VCM
R166
0603
C161
C162
0603
VCM
VTHP
VTHM
R21
0603
C21
0603
VMAX
C20
0603
QFN4X4_28_Z
R20
0603
/VDD
/SCL
/SDA
/RSTB
/LVDS_OUTP
/LVDS_OUTM
/V3R
/VTHP
/VCM
/VTHM
/VMAX
/GND
/ADC_INM
/ADC_INP
/V12D
/CK
/V3C
/V3A
SCL-Main
SDA-Main
R19
0603
C19
0603
VREFF_LVDS
R17
0603
C17
0603
R18
0603
C18
0603
J6
32K101-400L5
R200
0603
C200
0603
C201
0603
D1
TX1-R5
J8
32K101-400L5
c199
0603
R199
0603
Title
Size
A4
Number
Revision
Date: 7/16/2025
File: C:\Users\...\Sheet2.SchDoc
Sheet of
Drawn By:

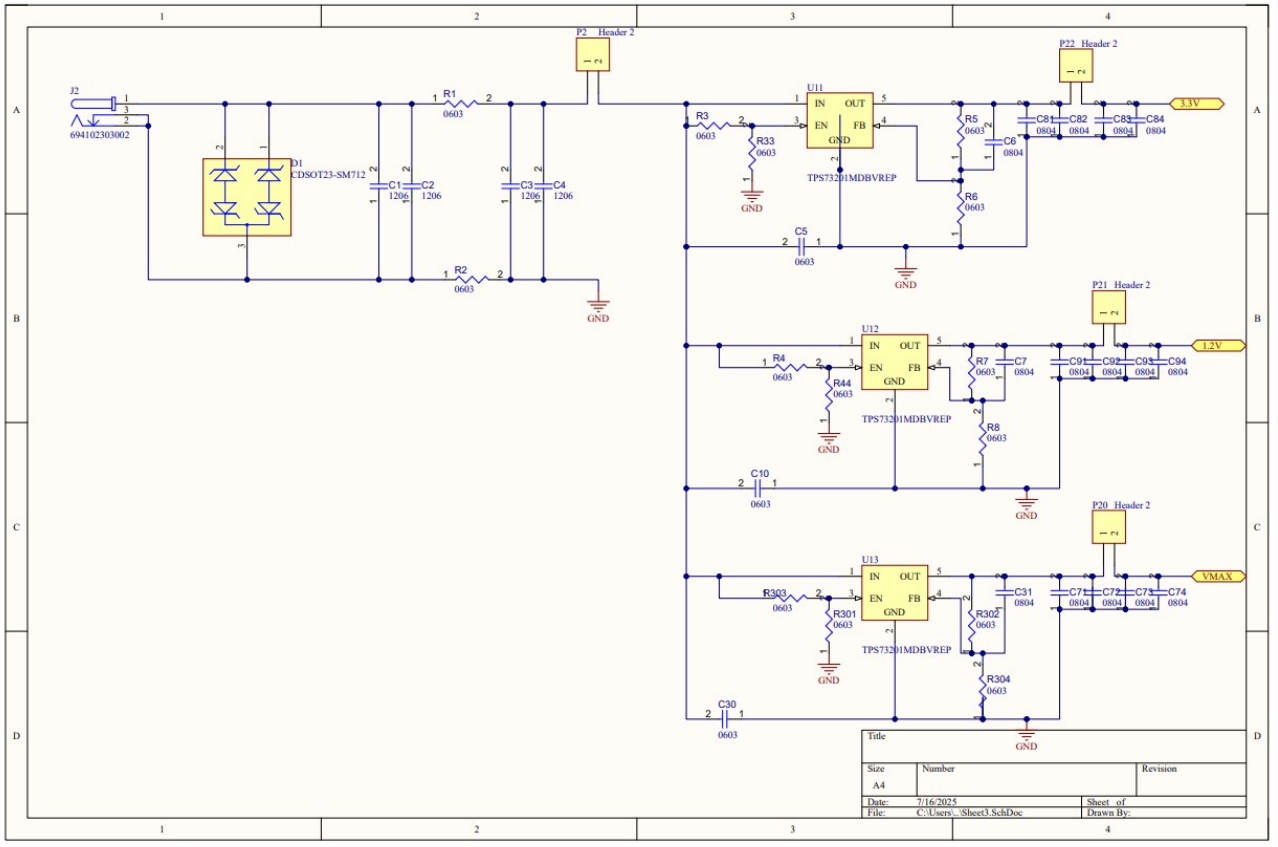
J2
694102303002
D1
CDSOT23-SM712
C1
C2
C3
C4
1206
R1
R2
0603
P2 Header 2
U11
IN
OUT
EN
FB
GND
TPS73201MDBVREP
R3
R33
R5
R6
C6
0804
C81
C82
C83
C84
P22 Header 2
3.3V
C5
U12
R4
R44
R7
R8
C7
C91
C92
C93
C94
P21 Header 2
1.2V
C10
U13
R303
R301
R302
R304
C31
C71
C72
C73
C74
P20 Header 2
VMAX
C30
Title
Size
A4
Number
Revision
Date: 7/16/2025
File: C:\Users\...\Sheet3.SchDoc
Sheet of
Drawn By:

5. PCB Layout Strategy

The PCB layout was executed following best practices for mixed-signal and data-conversion systems:

- Grounding strategy designed to minimize noise coupling
- Short and direct routing for sensitive analog signals
- Close placement of decoupling capacitors
- Physical separation between analog and high-speed digital routing
- Stack-up and routing discipline selected to support signal integrity

The layout prioritizes **measurement fidelity and electrical robustness** rather than form-factor optimization.

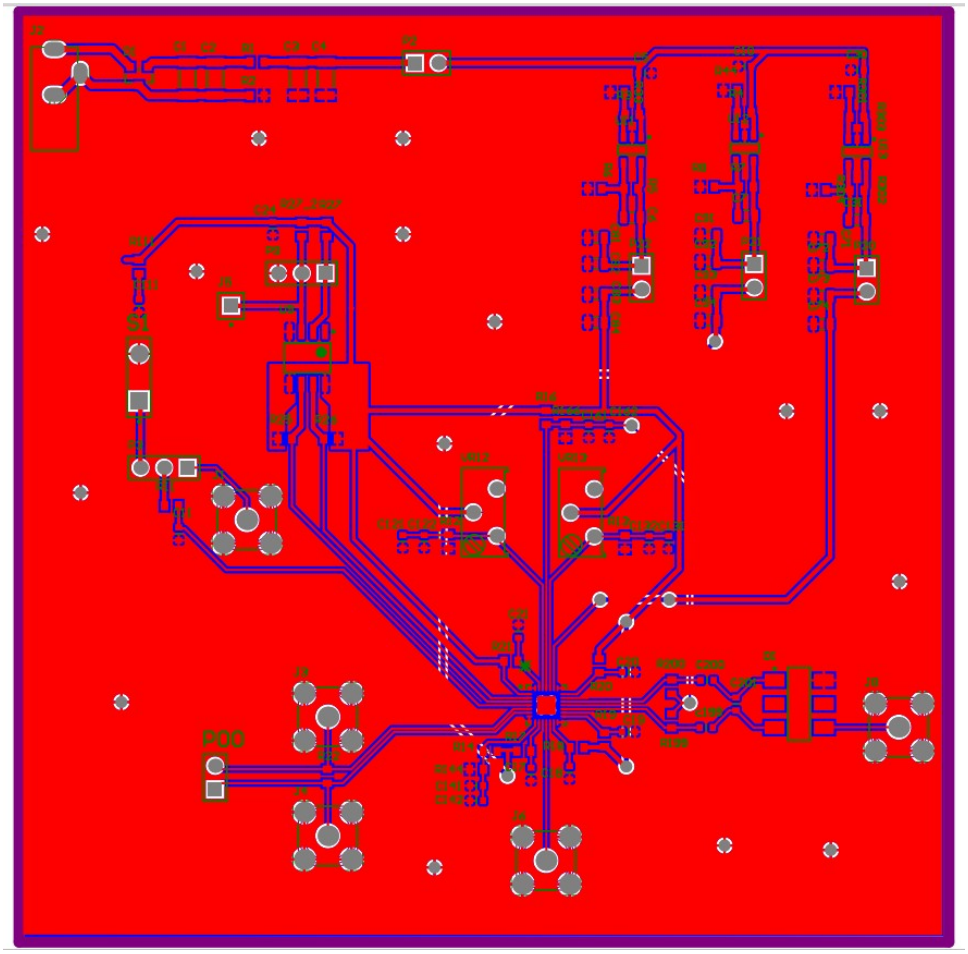

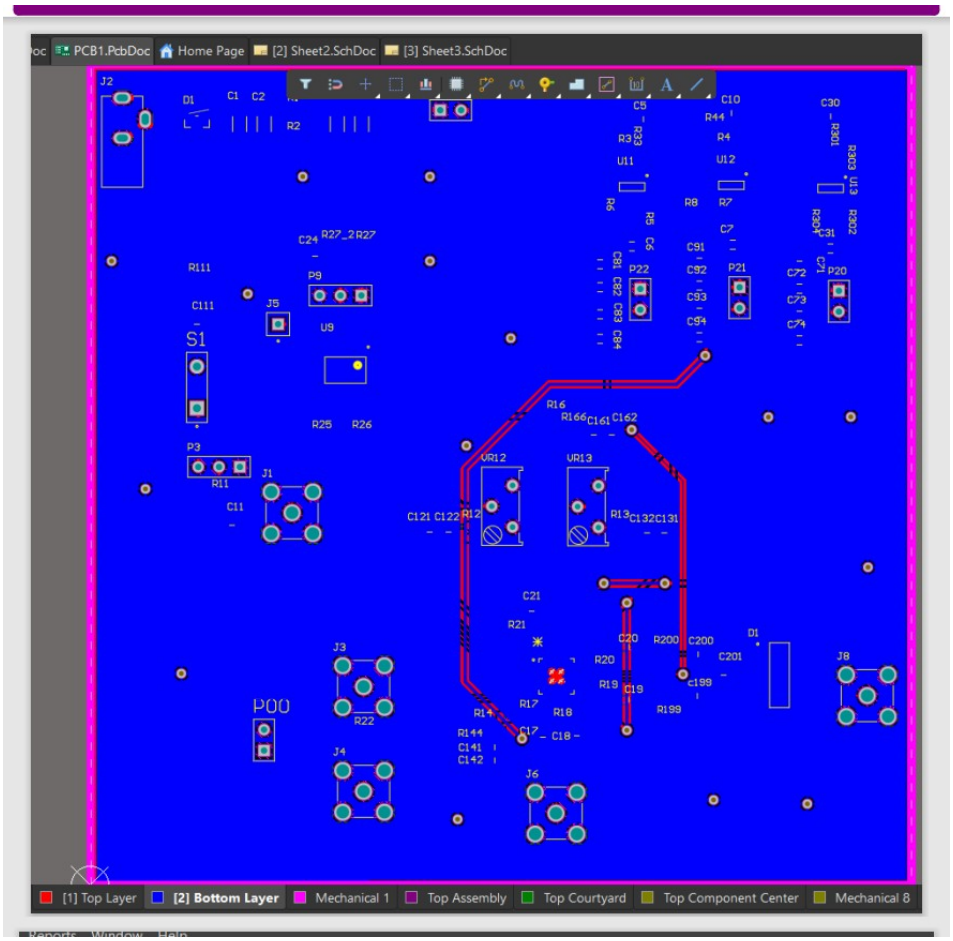
PCB1.PcbDoc
Home Page
[2] Sheet2.SchDoc
[3] Sheet3.SchDoc
[1] Top Layer
[2] Bottom Layer
Mechanical 1
Top Assembly
Top Courtyard
Top Component Center
Mechanical 8

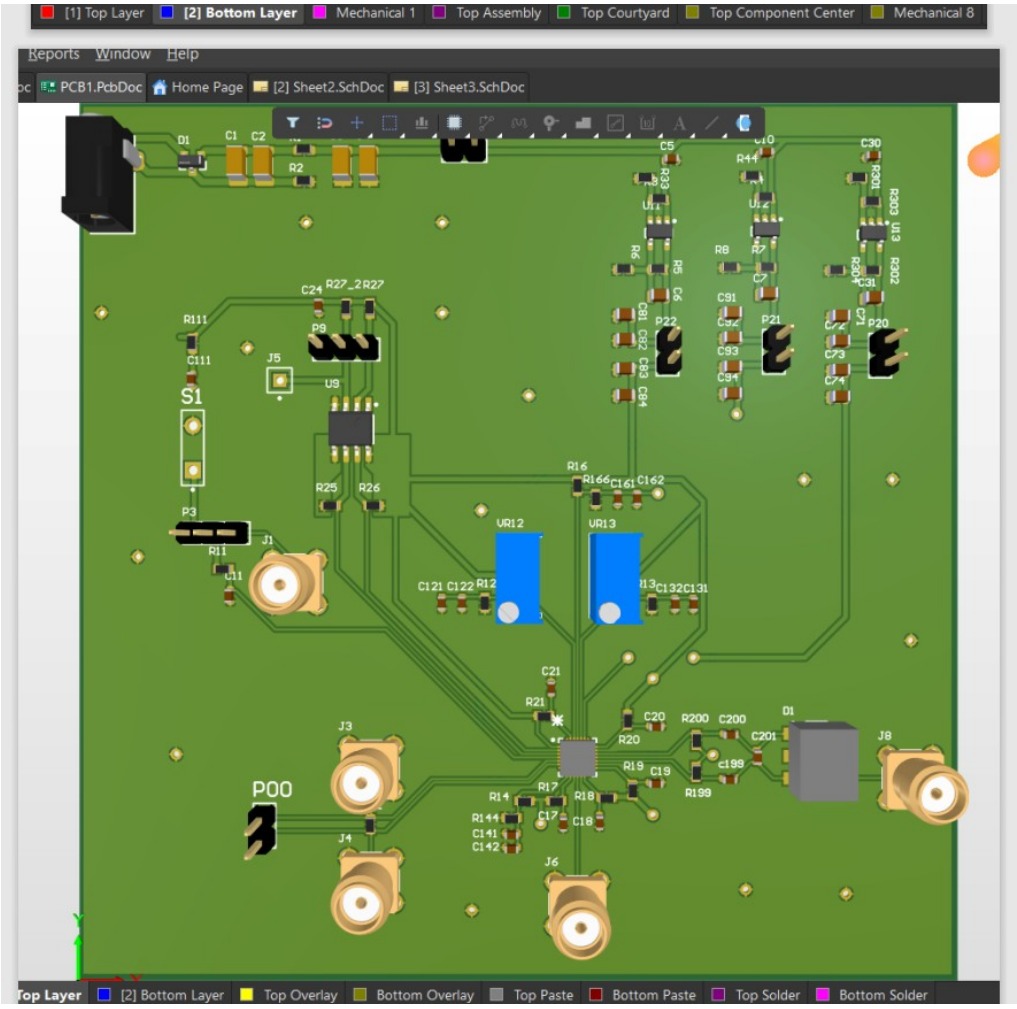
[1] Top Layer
[2] Bottom Layer
Mechanical 1
Top Assembly
Top Courtyard
Top Component Center
Mechanical 8
Reports
Window
Help
PCB1.PcbDoc
Home Page
[2] Sheet2.SchDoc
[3] Sheet3.SchDoc
Top Layer
[2] Bottom Layer
Top Overlay
Bottom Overlay
Top Paste
Bottom Paste
Top Solder
Bottom Solder

---

6. Test and Validation Intent

Although the PCB does not implement ADC logic itself, it was designed to support:

- Functional validation
- Electrical performance characterization
- Integration testing within a broader system

The board provides sufficient access for instrumentation and debugging while maintaining a stable electrical environment.

---

7. Confidentiality Notice

All schematics, layouts, and design artifacts shown are the intellectual property of the customer. Specific component values, performance figures, and architectural details are intentionally excluded.

This portfolio entry demonstrates **engineering methodology, PCB design discipline, and professional handling of customer IP**.

---

8. Conclusion

This project demonstrates experience in:

- Professional PCB design for mixed-signal systems
- Modular architecture for evaluation platforms
- Schematic capture and layout using industry-standard EDA tools
- Working under real-world confidentiality constraints

The design reflects practical considerations encountered in semiconductor evaluation and customer-owned IP projects.